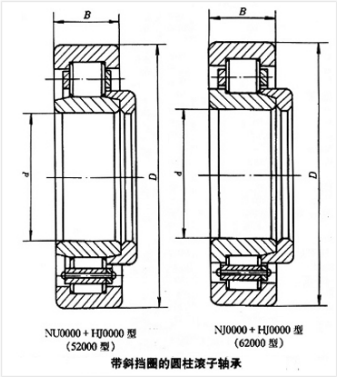

Bearing Model NU244/C9+HJ244

Overall dimension (mm)

d 220

D 400

B 65

Limit speed (RPM)

Grease -

Oil lubrication -

Rated load

Cr(N) -

Cr(N) -

Weight(kg) 39