UELP211 Pillow block bearing TEL:+86-571-28802151

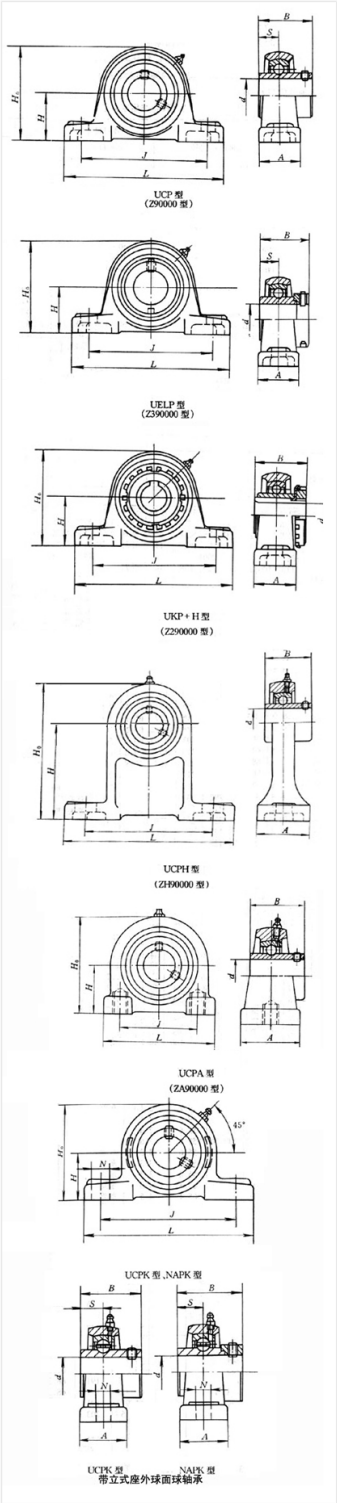

Bearing Model UELP211

Overall dimension (mm)

d 55

D 71.4

B 233

Limit speed (RPM)

Grease -

Oil lubrication -

Rated load

Cr(N) -

Cr(N) -

Weight(kg) -