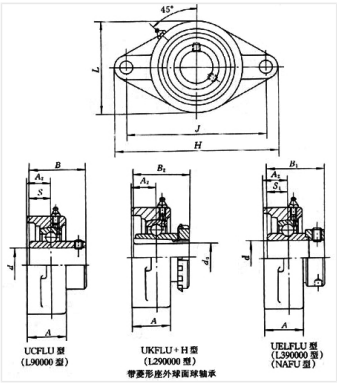

Bearing Model NAFLU213-43

Overall dimension (mm)

d 68.262

D 250

B 210

Limit speed (RPM)

Grease -

Oil lubrication -

Rated load

Cr(N) -

Cr(N) -

Weight(kg) 5.8