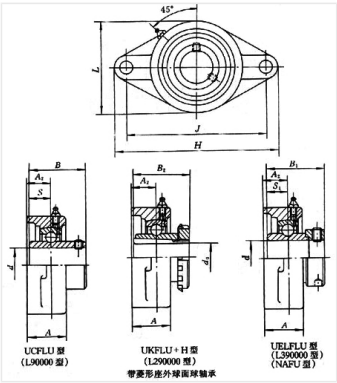

Bearing Model NAFLU215-47

Overall dimension (mm)

d 74.612

D 270

B 225

Limit speed (RPM)

Grease -

Oil lubrication -

Rated load

Cr(N) -

Cr(N) -

Weight(kg) 7.1